RATINGS AND SPECIFICATIONS

TEMBREAK 2 CIRCUIT BREAKERS WITH INTEGRAL RESIDUAL CURRENT PROTECTION (CBR) MCCB Electrical Characteristics to IEC 60947-1, IEC 60947-2, IEC 60947-2 ANNEX B, IEC 60755

Frame reference	Quantity	Unit	Condition	
Maximum In (A) of Frame				
Model Number of Poles Type				
Nominal current ratings				
	I_n	(A)	50°C	
Electrical characteristics				
Rated operational voltage Rated insulation voltage Rated impulse voltage	U_e U_i U_{imp}	(V) (V) (kV)	AC 50/60 Hz	
Ultimate breaking capacity (IEC, JIS,AS/NZS)	I_{cu}	(kA)	525V AC 440V AC 400/415V AC 220/240V AC	
Service breaking capacity (IEC, JIS,AS/NZS)	I_{cu}	(kA)	525V AC 440V AC 400/415V AC 220/240V AC	
Protection				
Adjustable thermal, fixed magnetic Residual current protection, Type A Utilisation Category				
Installation				
Front Connection (FC) Extension Bar (FB) Cable Clamp (FW) Rear Connection (RC) Plug-in (PM) Din Rail Mounting (DA) Dimensions:	height width depth	(mm) (mm) (mm)	3 pole 4 pole	
Weight	weight	(kg)	3 pole 4 pole	
Operation				
Direct Opening Action Toggle operation Door mounted (HS)/ Breaker mounted handle (HB) Motor operation Residual Current Monitor and Remote Trip Module				
Endurance	Electrical Mechanical	cycles cycles	415V AC	

■ Standard • Optional - Not Available

	TB2 S125			TB2 S250		
	125			**250**		
	ZE125	ZS125	ZS125	ZE250	ZS250	ZS250
	3,4 NJ	3,4 NJ	3,4 GJ	3,4 NJ	3,4 NJ	3,4 GJ
	20,32 50,63 100,125	20,32 50,63 100,125	20,32 50,63 100,125	160,250	160,250	160,250
	525 525 8	525 525 8	525 525 8	525 525 8	525 525 8	525 525 8
	8 15 25 35	22 25 36 50	25 50 65 85	10 15 25 35	25 25 36 65	25 50 65 85
	6 12 19 27	22 25 36/30 50	22 25 36/33 85	7.5 12 19 27	25 25 36 65	25 25 36 85
	■ ■ A	■ ■ A	■ ■ A	■ ■ A	■ ■ A	■ ■ A
	■ • • • - • 155 90 120 68 1.1 1.4	■ • • • - • 155 90 120 68 1.1 1.4	■ • • • - • 155 90 120 68 1.1 1.4	■ • • • - • 165 105 140 68 1.5 1.9	■ • • • - • 165 105 140 68 1.5 1.9	■ • • • - • 165 105 140 68 1.5 1.9
	■ ■ • • •	■ ■ • • •	■ ■ • • •	■ ■ • • •	■ ■ • • •	■ ■ • • •
	30,000 30,000			10,000 10,000		

RESIDUAL (EARTH LEAKAGE) CURRENT PROTECTION

CBR Test Button, Trip Indicator, Power LED and Adjustment Dial

4 Pole CBR with Adjustable Settings

Circuit Breakers with Integral Residual Current Protection (CBRs) are the ultimate safeguards against the hazards of earth leakage.

The TemBreak 2 CBR range is available in 2 frame sizes, 125A and 250A. Interrupting capacities of 25kA, 36kA and 65kA are offered in 3 and 4 poles versions with adjustable thermal and fixed magnetic protection characteristics. CBR residual current protection settings are shown on the following page.

Residual Current Monitor and Pre Trip Module (Optional)

* Normally open alarm contact (2A, 250V AC) closes on detection of residual current. Alarm threshold is adjustable
* Green LED indicates voltage is present
* Red LED provides visual indications of residual current
* Can be configured to provide trip + alarm or alarm only
* Remote trip terminals allow tripping by pushbutton
* Can be configured to provide voltage drop protection

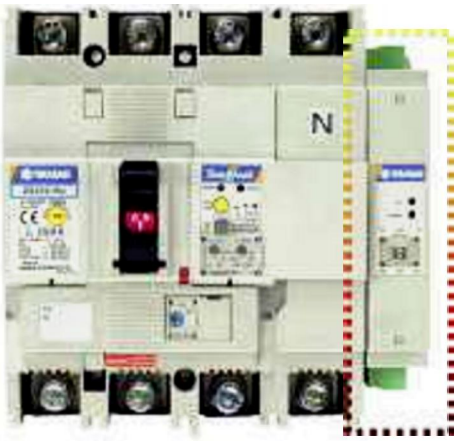

PROTECTION CHARACTERISTICS

RESIDUAL (EARTH LEAKAGE) CURRENT PROTECTION

Adjustment Dials

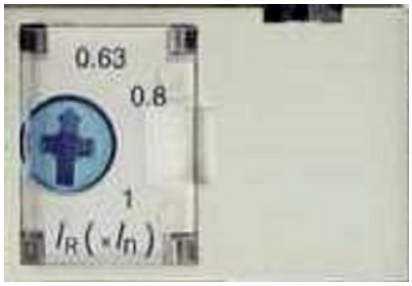

$I\Delta_n$ (A) is the adjustable tripping threshold for residual current (earth leakage) protection. It can be set between 30mA and 3A. Available settings are shown below:

Δ_t (ms) is a time delay which is introduced to the residual current (earth leakage) protection characteristic. Available settings are shown below. It can also be set to 0 (max. actual tripping time is 40ms) or NT (No Trip - tripping time = ∞). The maximum breaking time at each setting is shown in brackets. Note that if $I\Delta_t$ is set at 30mA, Δ_t defaults to 0.

I_R(A) is the adjustable tripping threshold for overload protection. It can be set between 0.63 and 1.0 times I_n. Available I_n ratings are shown below:

I_i is the tripping threshold for short-circuit protection. It is fixed at the values shown below:

Models, Ratings and Settings

Model	Type	IΔn (A)	Δt (ms)	Rated current In(A)	Magnetic trip current (A)
ZE125	-NJ	0.03, 0.1, 0.3, 0.5, 1, 3	0 (40), 60 (195), 200 (365), 400 (620) 700 (950), NT∞	20, 32, 50, 63, 100	12 x in
				125	10 x in
ZS125	-NJ	0.03, 0.1, 0.3, 0.5, 1, 3	0 (40), 60 (195), 200 (365), 400 (620) 700 (950), NT∞	20, 32, 50, 63, 100	12 x in
				125	10 x in
ZS125	-GJ	0.03, 0.1, 0.3, 0.5, 1, 3	0 (40), 60 (195), 200 (365), 400 (620) 700 (950), NT∞	20, 32, 50, 63, 100	12 x in
				125	10 x in
ZE250	-NJ	0.03, 0.1, 0.3, 0.5, 1, 3	0 (40), 60 (195), 200 (365), 400 (620) 700 (950), NT∞	160	13 x in
				250	10 x in
ZS250	-NJ	0.03, 0.1, 0.3, 0.5, 1, 3	0 (40), 60 (195), 200 (365), 400 (620) 700 (950), NT∞	160	13 x in
				250	10 x in
ZS250	-GJ	0.03, 0.1, 0.3, 0.5, 1, 3	0 (40), 60 (195), 200 (365), 400 (620) 700 (950), NT∞	160	13 x in
				250	10 x in

RESIDUAL (EARTH LEAKAGE) CURRENT PROTECTION

Time/Current Characteristic Curves

ZE125-NJ, ZS125-NJ, ZS125-GJ, ZE250-NJ, ZS250-NJ, ZS250-GJ

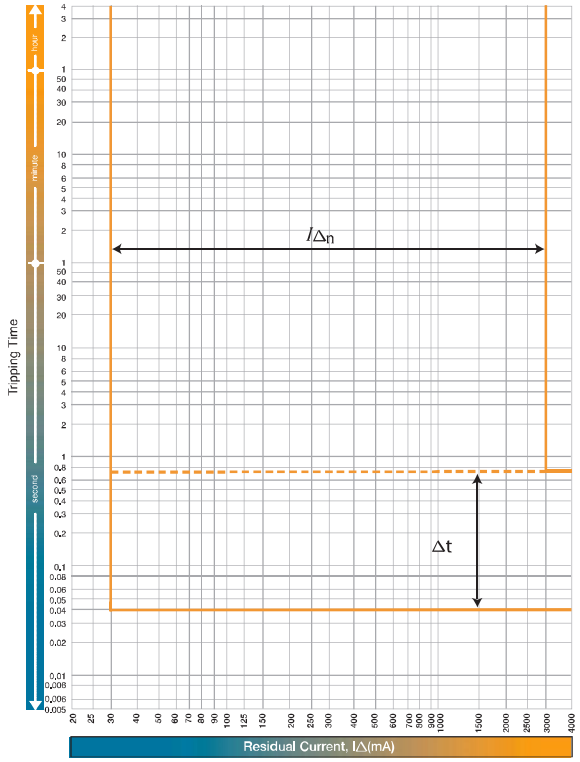

Time/Current Characteristic Curves

ZE125-NJ, ZS125-NJ, ZS125-GJ

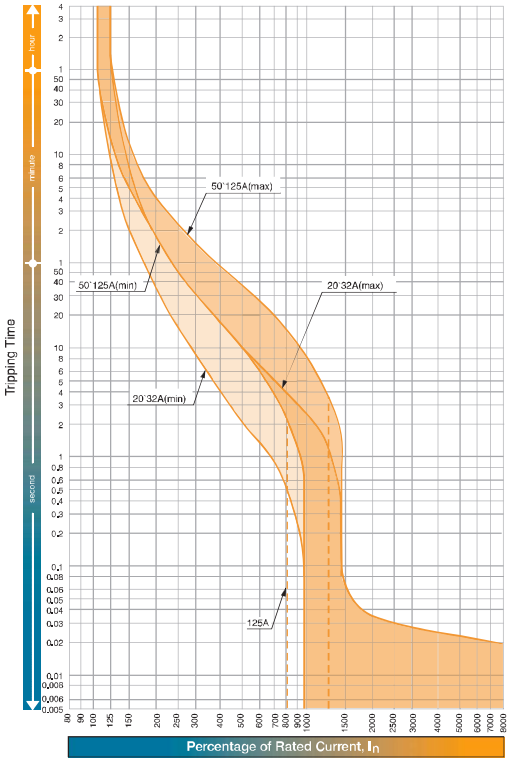

Time/Current Characteristic Curves

ZE250-NJ, ZS250NJ, ZS 250-GJ, 160A

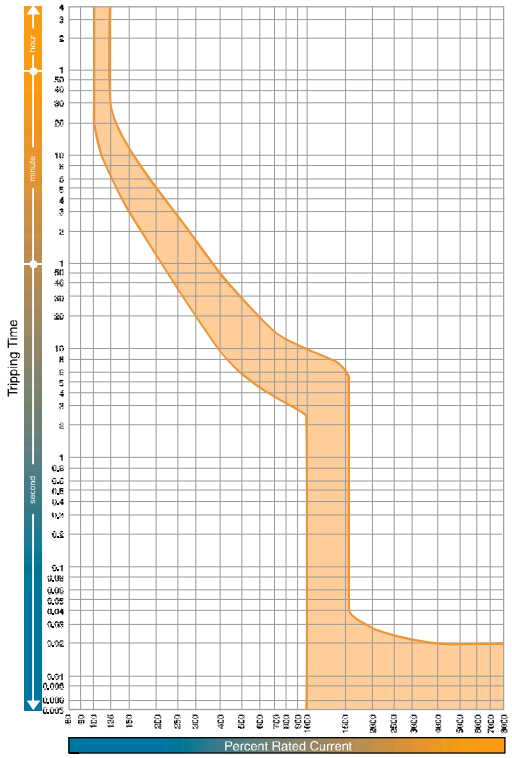

Time/Current Characteristic Curves

ZE250-NJ, ZS250NJ, ZS 250-GJ, 250A

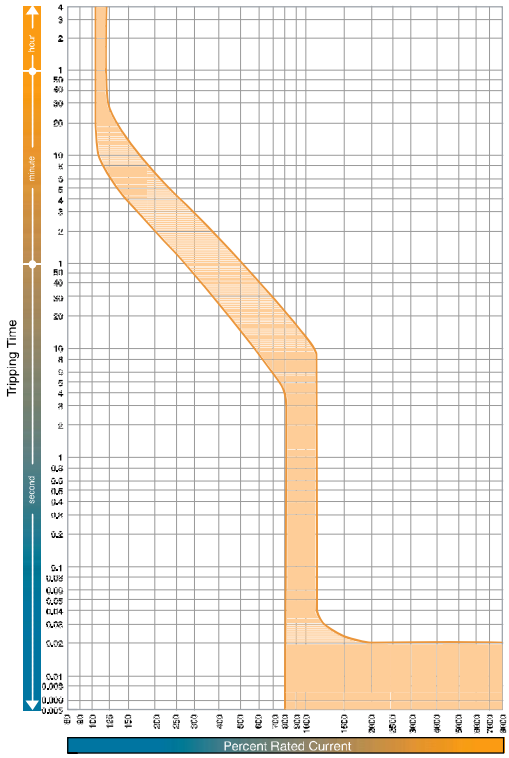

SECTION 2

INSTALLATION

TEMBREAK 2 MCCBs AND SWITCH DISCONNECTORS

Connection and Mounting

TemBreak 2 MCCBs connection and mounting accessories facilitate easy installation in any arrangement. Breakers and accessories are easy to fit. They are designed to provide safe and secure termination and mounting points. 125A and 160A/250A frame models have a 45mm front cutout.

45mm Cutout Patterns

Connection and mounting options overview diagram

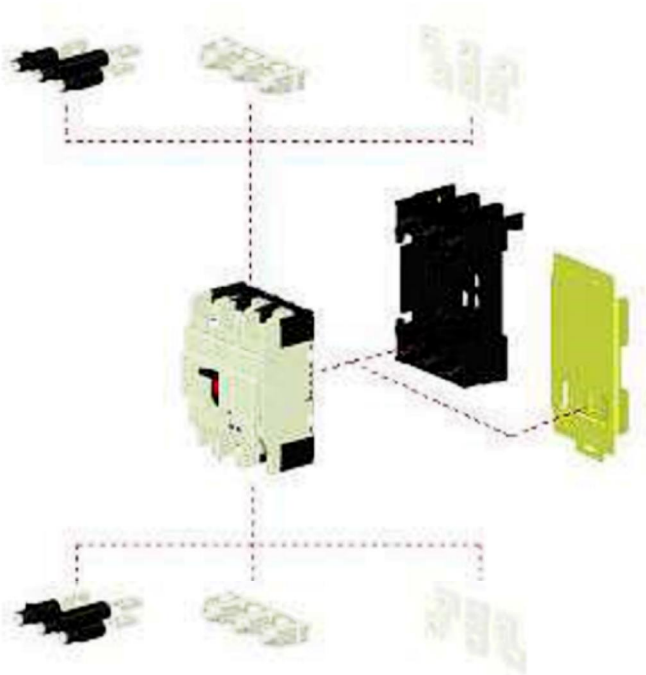

Overview of Connection and Mounting Accessories

Please refer to Section, 1 Ratings and Specifications, for details of the connection and mounting options which are available for each model.

Please refer to Section, 6 Dimensions, for detailed dimensions of connection and mounting options and accessories.

Note that one set of mounting screws is supplied as standard with every circuit breaker or switch disconnector purchased.

TEMBREAK 2 MCCBs AND SWITCH DISCONNECTORS

Connection and Mounting

Connection of Busbars and Terminated Cables

This connection method is standard for all **front connected** (FC) MCCB models. Solid conductors or cables terminated with crimp lug terminals can be used.

Serrated Terminal Surface

Each terminal on 160A and 250A models has a serrated surface. This provides excellent grip for heavy cables terminated with crimp lug terminals, thereby preventing sideways rotation of the lug.

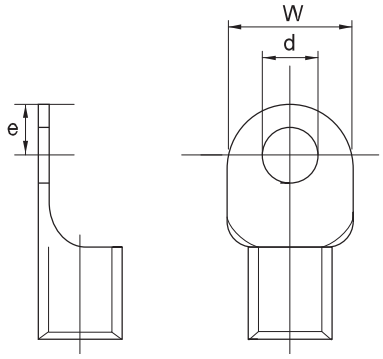

Maximum Dimensions of Compression Terminals			
Frame Size (A)	125*	160 & 250	400 & 630
Width, W (mm)	17	25	25
Diameter, d (mm)	9	9	11
Maximum from centre to tip, dim e (mm)	8.5	10	12

Connection of Large Conductors and Multiple Conductors

Extension bars (FB) are terminal extensions which can be fitted to line or load side terminals and are used to connect large conductors and multiple conductors. Available for field fitting in sets of 3 or 4 bars.

*H125 and L125 are 250A frame size

TEMBREAK 2 MCCBs AND SWITCH DISCONNECTORS

Insulation Distances

The insulation distances between the MCCB and earthed metal parts and insulators shown in this section must be maintained to prevent arcing faults occurring due to conductive ionised gas. In cases where other specifications require different insulation distances to those shown here, the greater distance must be maintained. In cases where two different models are installed one above the other, the insulation distance between the two models should be as for the lower model.

ATTENTION

Exposed conductors must be insulated up to the breaker terminals. Interpole barriers or optional terminal covers are recommended. If optional terminal covers are used, insulate the exposed conductor until it overlaps the terminal cover.

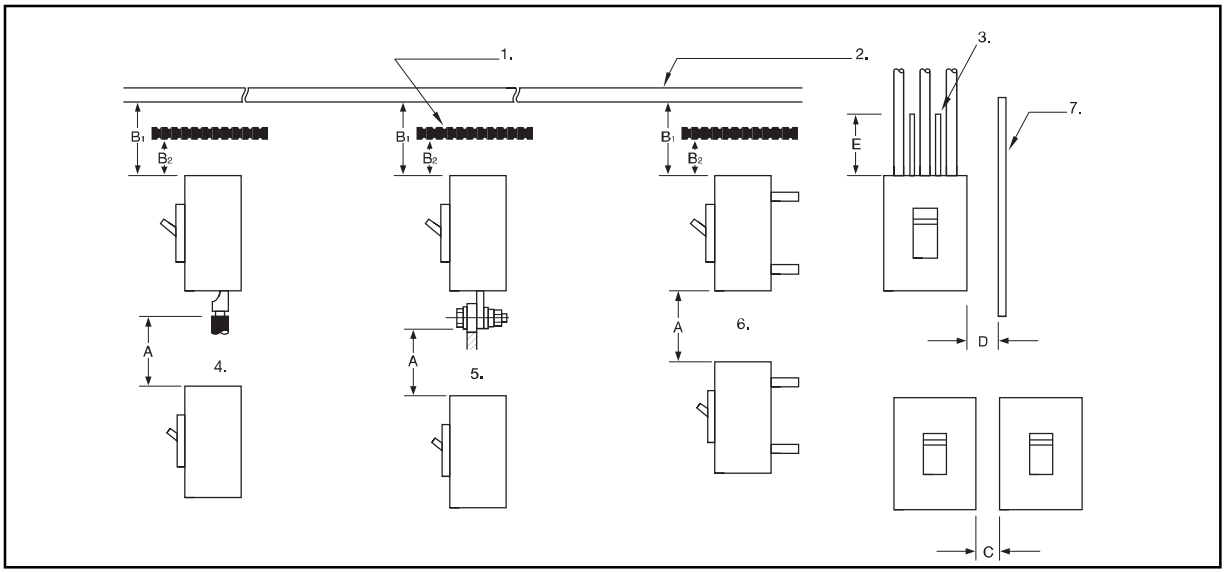

1. Insulation plate
2. Top plate (earthed metal)
3. Interpole barrier
4. Front-connected type
5. Front-connected type with extension bar
6. Rear-connected type, plug-in type
7. Side panel
8. **A.** Distance from lower breaker to exposed live part of upper breaker terminal (front-connected type) or distance from lower breaker to end face of upper breaker (rear-connected type or plug-in type)
   B1. Distance from end face of breaker to top plate
   B2. Distance from end face of breaker to insulation plate
   C. Gap between breakers
   D. Distance from side of breaker to side panel (earthed metal)
   E. Dimensions of insulation over exposed conductors

INSTALLATION

TEMBREAK 2 MCCBs AND SWITCH DISCONNECTORS

Insulation Distance in mm (At 690V AC Maximum) Note (5)

Model	Type	A	B1	B2	C (4)	D	E
S125	NJ	50	40(2)	10	0	25	*(1)
S125	GJ	75	45	25	0	25	*(1)
H125	NJ	100	80	60	0	50	*(1)
L125	NJ	100	80	60	0	50	*(1)
L125	PJ	120	120	80	0	50	*(1)
S160	NJ	50	40	30	0	25	*(1)
S160	GJ	100	80	60	0	50	*(1)
H160	NJ	100	80	60	0	50	*(1)
L160	NJ	100	80	60	0	50	*(1)
S250	NJ	50	40	30	0	25	*(1)
S250	NE	50	40	30	0	25	*(1)
S250	GJ	100	80	30	0	25	*(1)
S250	GE	100	80	30	0	25	*(1)
S250	PE	100	80	60	0	50	*(1)
H250	NJ	100	80	60	0	50	*(1)
H250	NE	100	80	60	0	50	*(1)
L250	NJ	100	80	60	0	50	*(1)
E400	NJ	100	80	40	0	30	*(1)
S400	CJ	100	80	40	0	30	*(1)
S400	NJ	100	80	40	0	30	*(1)
S400	GJ	100	80	40	0	30	*(1)
S400	GE	100	80	40	0	30	*(1)
S400	PJ	100	80	40	0	30	*(1)
S400	PE	100	80	40	0	30	*(1)
H400	NE	120	120	80	0	80	*(1)
L400	NE	120	120	80	0	80	*(1)
L400	PE	120	120	80	0	80	*(1)
E630	NE	120	100	80	0	80	*(1)
S630	CE	120	100	80	0	80	*(1)
S630	GE	120	100	80	0	80	*(1)
S800	CJ	120	100	80	0	80	*(1)
S800	NJ	120	100	80	0	80	*(1)
S800	NE	120	100	80	0	80	*(1)
S800	RJ	150	120	80	0	80	*(1)
S800	RE	150	120	80	0	80	*(1)
H800	NE	120(3)	120	80	0	80	*(1)
L800	NE	120(3)	120	80	0	80	*(1)
L800	PE	200(3)	200	160	0	100	*(1)
S1000	SE	150	120	80	0	80	*(1)
S1000	NE	150	120	80	0	80	*(1)
S1250	SE	150	120	80	0	80	*(1)
S1250	NE	150	120	80	0	80	*(1)
S1250	GE	150	150	100	0	100	*(1)
S1600	SE	150	150	100	0	100	*(1)
S1600	NE	150	150	100	0	100	*(1)

***Note:** (1) Insulate the exposed conductor until it overlaps the moulded case at the terminal, or the terminal cover.
(2) 10mm at 440V AC Maximum.
(3) Take care that arc gases are emitted to both line and load sides.
(4) If using extension bars (optional), ensure the insulation distance for the application.
(5) Contact Terasaki for model types VS125-NJ and VS250-NJ.

TEMBREAK 2 MCCBs AND SWITCH DISCONNECTORS

Mounting Angle

TemBreak 2 MCCBs may be mounted at any angle without affecting performance.

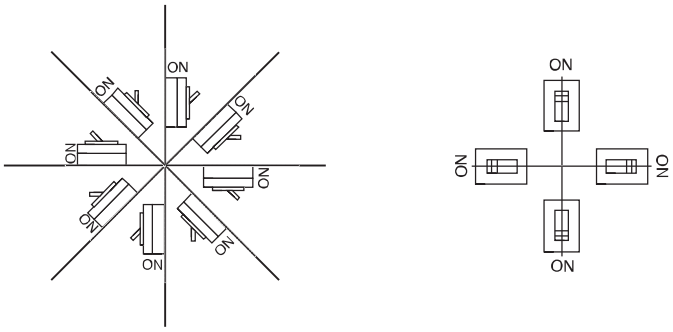

Mounting angle does not affect performance.

Direction of Power Supply

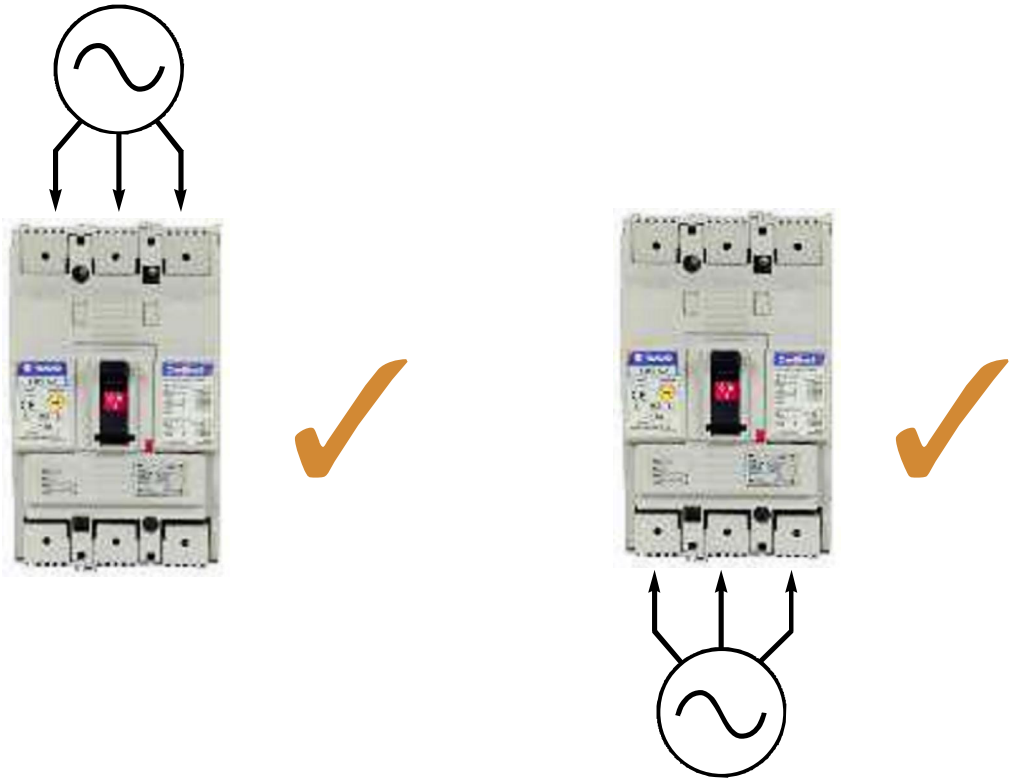

Power can be supplied through TemBreak 2 MCCBs in either direction without loss of performance.

INSTALLATION

TEMBREAK 2 MCCBs AND SWITCH DISCONNECTORS

Standard Installation Environment and Special Treatments

TemBreak 2 MCCBs are intended for installation in the following conditions as standard:

- Operating ambient temperature -10 degrees C to 50 degrees C. Refer to page 198, 199, 221 for thermal derating information above this temperature.
- Relative humidity of up to 85%.
- Altitude up to 2000m.
- Atmospheres free from dust, smoke, corrosive gases, inflammable gases, moisture and salt.

For installation in conditions more onerous than those described above, contact Terasaki for details.

The following special treatments have been developed for installation in specific environmental conditions:

- Low temperature treatment. For installation at temperatures down to -40 degrees C for storage and -20 degrees C for operation. The environment must be free from rapid changes in temperature that result in the formation of condensation.

- Fungus-moisture proofing. For installation at temperatures up to 65 degrees C and relative humidity of up to 95%. The environment must be free from rapid changes in temperature.

- Anti-corrosion treatment. MCCB is surface treated to increase resistance to corrosion. If the MCCB is to be installed in atmosphere that contains excessive volumes of corrosive gases or moisture, it should be house in an airtight enclosure.

TEMBREAK 2 MCCBs AND SWITCH DISCONNECTORS

Temperature Ratings

Calibration Temperature: 50°C

MCCB Type	Connection Type	Rating at calibration temperature (50°C)	Rated Current (A)			
			50°C	55°C	60°C	65°C
S125-NJ S125-GJ	Front Rear Plug-in	20A	20	18.5	18	17.5
		32A	32	30.5	30	29
		50A	50	45	43	41
		63A	63	57	55	52
		100A	100	94	90	87
		125A	125	117	113	109
H125-NJ L125-NJ L125-PJ	Front Rear Plug-in	20A	20	18.5	18	17.5
		32A	32	30	29	28
		50A	50	47	45	44
		63A	63	59	57	55
		100A	100	95	92	89
		125A	125	118	114	111
S160-NJ	Front	20A	20	18.5	18	17.5
	Rear, Plug-in	32A	32	30	29	28
S160-NJ S160-GJ	Front Rear Plug-in	50A	50	46	44	42
		63A	63	59	57	55
		100A	100	94	91	88
		125A	125	117	113	109
		160A	160	151	146	141
H160-NJ L160-NJ	Front Rear Plug-in	160A	160	151	147	143
S250-NJ S250-GJ	Front Rear	160A	160	151	146	141
		250A	250	235	227	219
H250-NJ L250-NJ	Front Rear Plug-in	160A	160	151	147	143
	Front Rear	250A	250	237	230	223
S400-CJ S400-NJ S400-GJ S400-PJ	Front Rear Plug-in	250A	250	237	230	223
		400A	400	380	369	358
S800-CJ S800-NJ S800-RJ	Front Rear Plug-in	630A	630	600.1	584.7	569.4
		800A	800	758.9	737.9	716.9

Calibration Temperature: 30°C

Models Calibrated at 30°C		Rating at calibration temperature (30°C)	30°C	40°C	50°C	55°C	60°C	65°C
H250-NJ L250-NJ	Plug-in	250A	250	236	219	209	200	190

DIMENSIONS

TEMBREAK 2 MOULDED CASE CIRCUIT BREAKERS WITH INTEGRAL RESIDUAL CURRENT PROTECTION (CBR)

ZE125-NJ, ZS125-NJ, ZS125-GJ

ASL: Arrangement Standard Line ℄: Handle Frame Centre Line

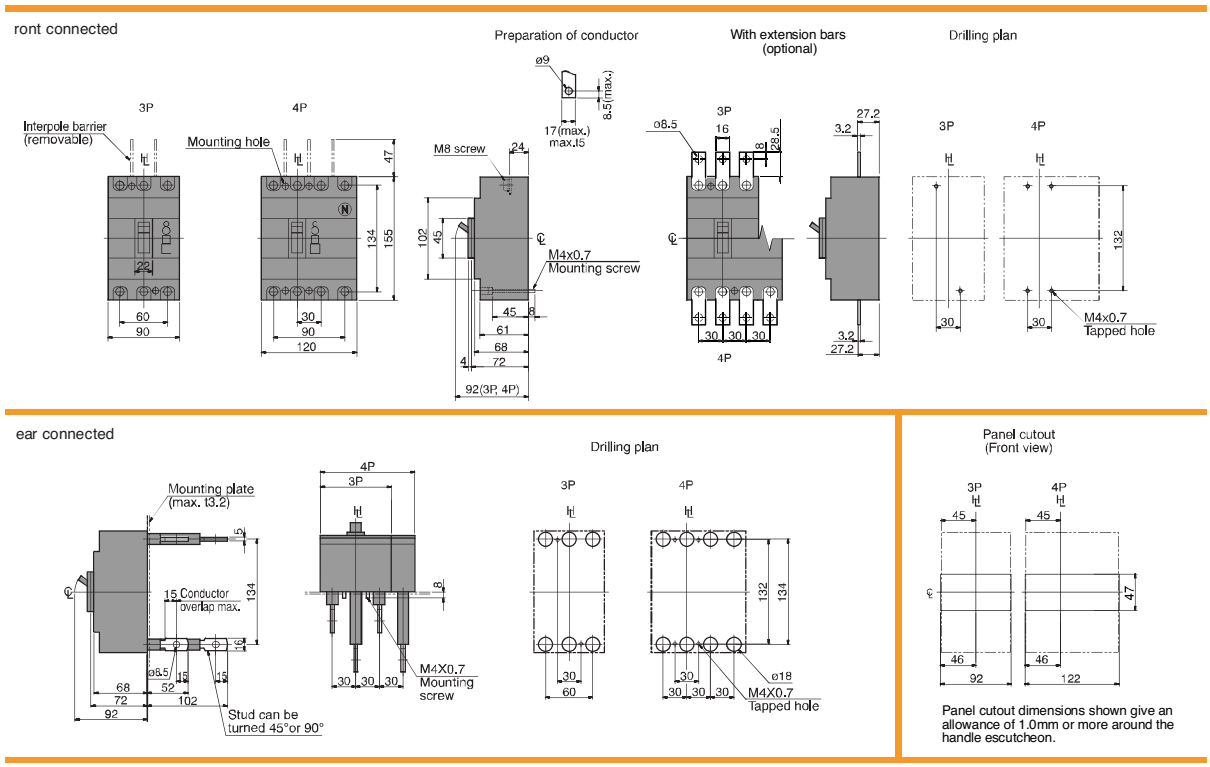

INTERPOLE BARRIERS

Tembreak 2 MCCBs & Switch Disconnectors

Terminal Interpole Barriers (BA)

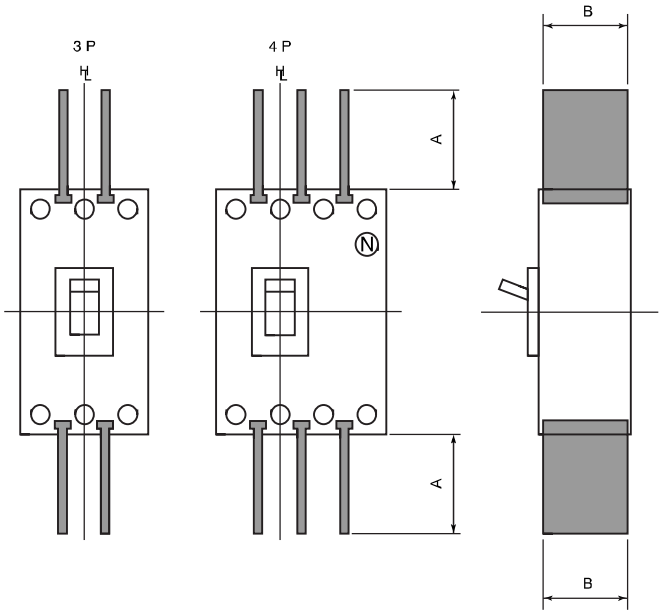

t pe		
1 1		
1 0 0 0 0 0 0 P 1 0	100	
1 1 1 0 1 0 0 0 0 P 0 0	100	
00 00 0 0 P 00	110	
00 00	110	
00 00 00 1000 P 00	110	

SECTION 6